MANUAL MB-009

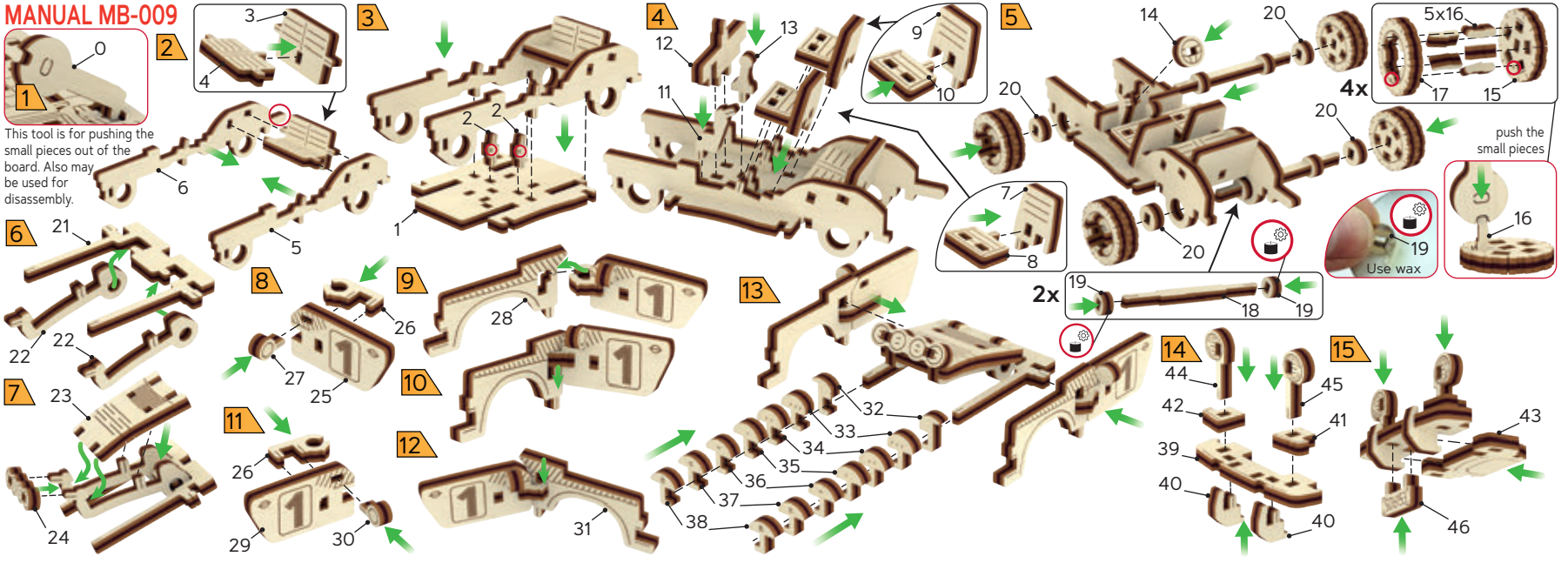

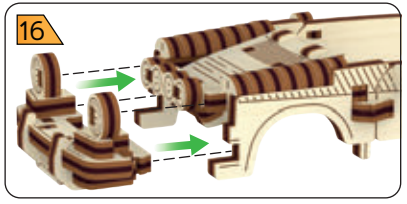
16

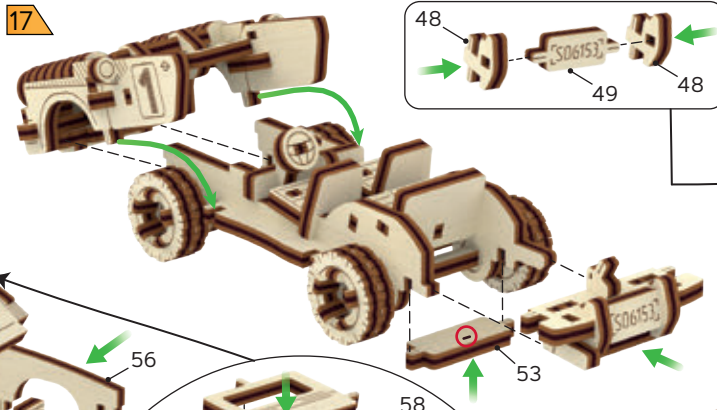
17
53

48
49
48

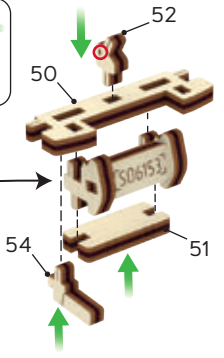
52
50
54
51

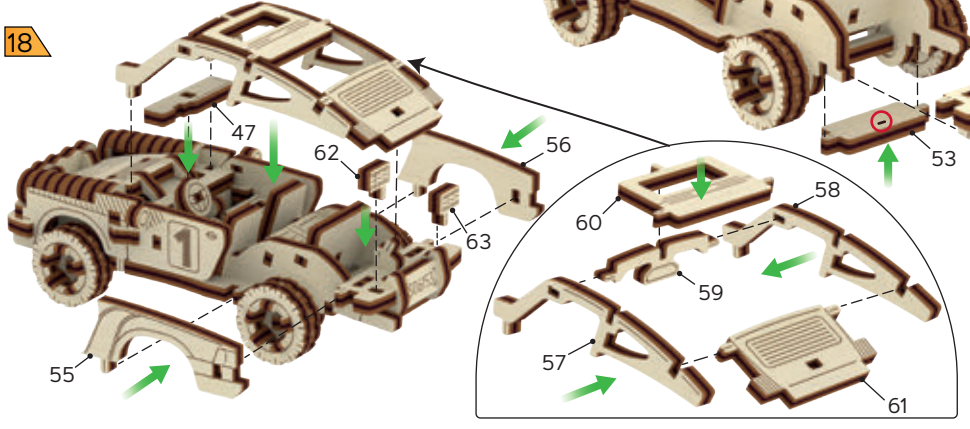
18
47
62
56
63
55
60
58
59
57
61

19

OTHER MODELS